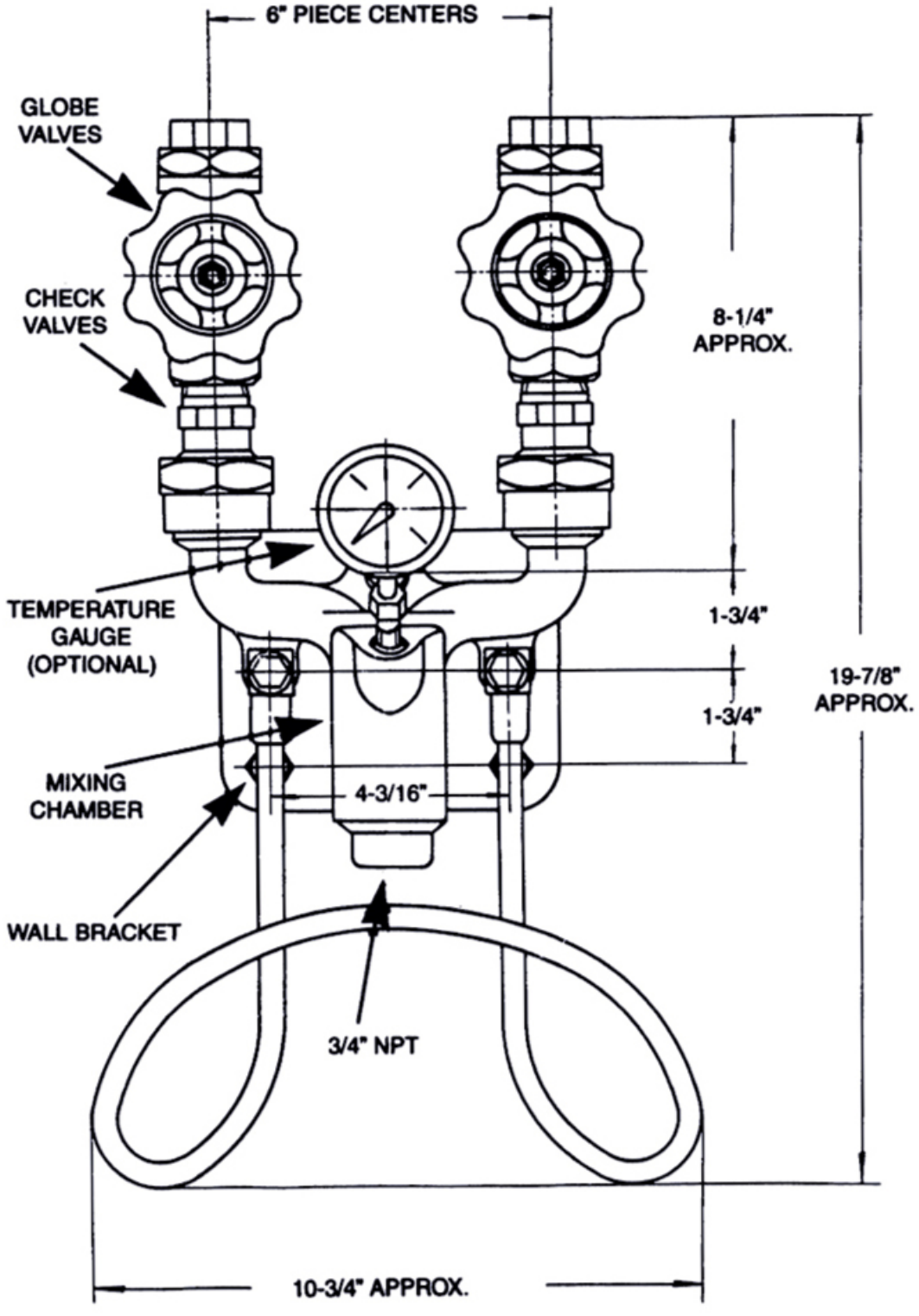
6" PIECE CENTERS
GLOBE VALVES
CHECK VALVES
8-1/4" APPROX.
TEMPERATURE GAUGE (OPTIONAL)
1-3/4"
1-3/4"
19-7/8" APPROX.
MIXING CHAMBER
4-3/16"
WALL BRACKET
3/4" NPT
10-3/4" APPROX.

FRONT VIEW

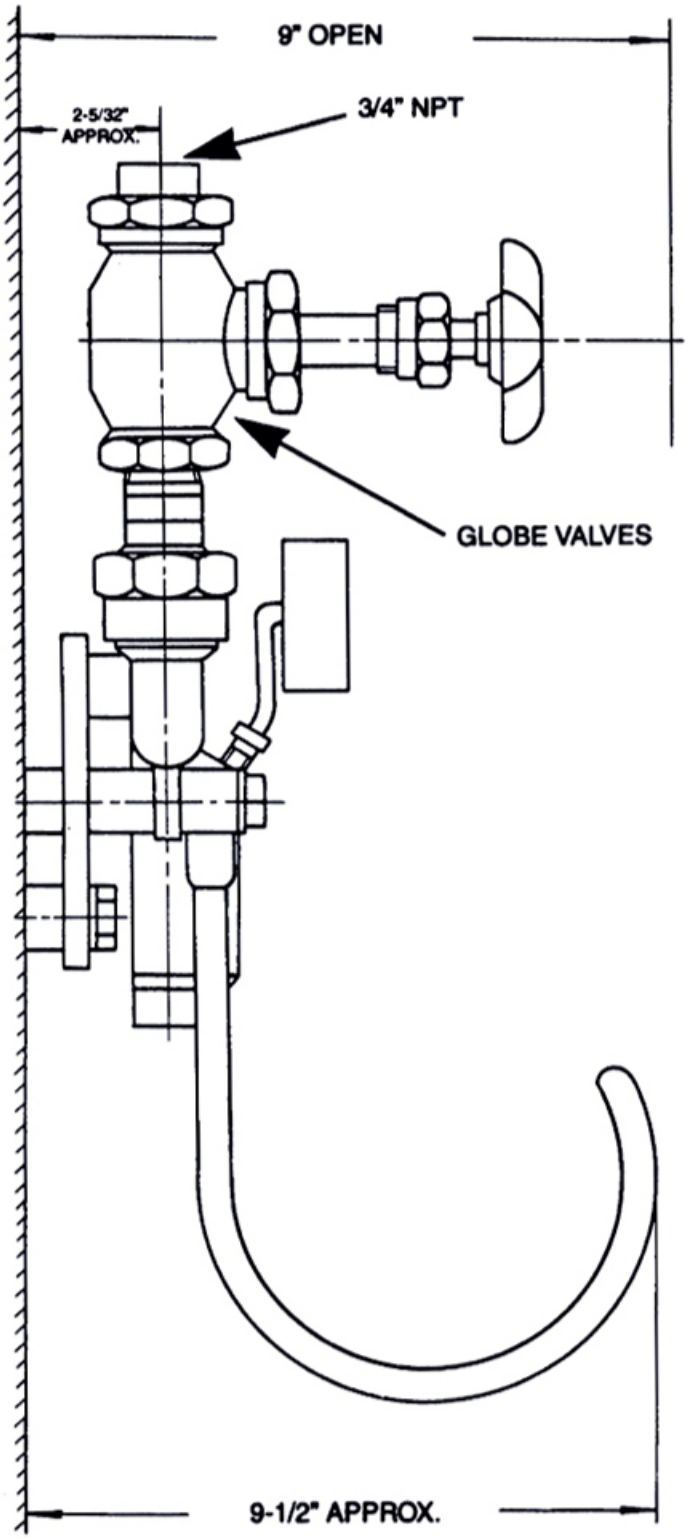

SIDE VIEW